Conference Chair - RM200K

Technical Data Sheet

Cinema and conference hall seats are specially designed products. We design conference chair models in dozens of different colors and models. Our team offers you a whole range of chair models that meet your specific needs and emphasize comfort. we produce models that have ergonomics, visuals, aesthetics, and correct placement in the selection of seats, when designing conference rooms.

We choose seats for cinemas and conference halls that are easily visible to everyone and consider acoustic elements. The seats we produce create an environment that provides maximum comfort and high performance in conference halls and cinemas that can meet your needs and desires. We design special seat models for many venues, from educational institutions to cultural centers, from cinemas to theater halls.

ROM CLOSED ARM CONFERENCE SEAT

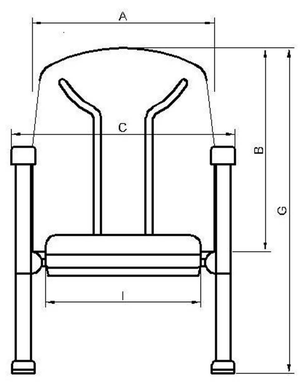

FRONT VIEW

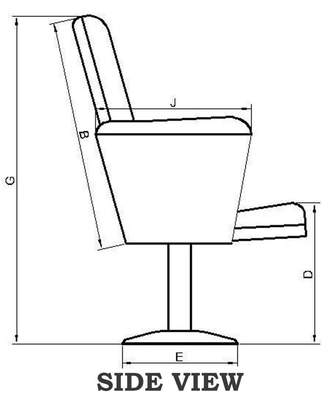

SIDE VIEW

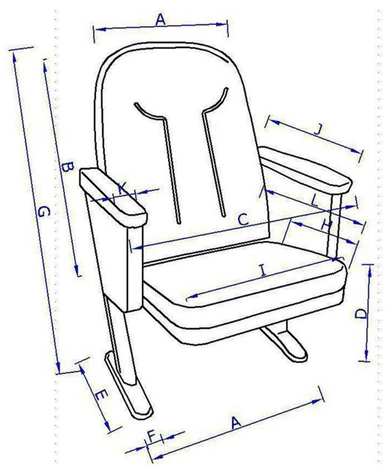

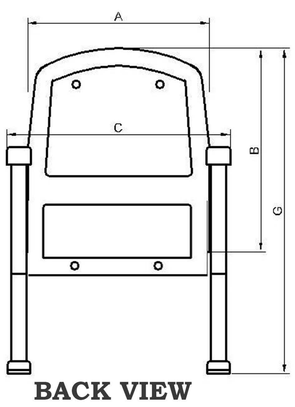

BACK VIEW

A- Backrest Width = 49 cm
B- Backrest Height = 59 cm
C- Chair Arm to Arm Width = 60 cm
D- Height of the Seating Part = 43 cm
E- Metal Leg Length= 31 cm
F- Metal Leg Width = 6 cm
G- Height = 88 cm
H- Lenght of the Seating Part = 43 cm
I- Width of the Seating Part = 46 cm
J- Arm Lenght = 42 cm
K- Arm Width = 6 cm
L- Distance from Backrest to Seat (Inside) = 58

DIMENSIONS

Width	Height	Backrest Height
600 mm	880 mm	590 mm

Backrest

-It is manufactured from pp copolymer plastic material using the injection printing system, by giving the pattern and geometry in a special mold, so that the user is not affected by foot scratches and contamination and provides easy cleaning.
-The seat plastic has acoustic properties. Additionally, the seat cover will have **HOLES** to provide air circulation and absorption.

Seat Armrest

-The side armrests of the seat are processed from Particleboard, Chipboard, ChipboardLam and plywood material in accordance with the seat standards.
-The armrests of both armrests are manufactured using pp copolymer plastic.

The Sponge that is used in Backrest and Seat Parts

-Properties of the ELASTOFLEX W system is 310-10.
-***Sponge - Free Density :*** 41-47 kg/m³
-***Sponge Stereotypical Density :*** 50-55 kg/m³
-***Fire Proof Norm :*** MVSS-32/B Class
-***Tensile Resistance of Polyurethane Sponge:*** According to ISO 1798, it was determined as 140 ± 5 kPa.
-***Elongation at Break of Polyurethane Sponge :*** According to ISO 1798, it was determined as 145 ± kpa.
-***Tear Resistance of Polyurethane Sponge :*** According to ASTM.D 3574, it was determined as 2.5 ± 0.2 N/cm².
-***Burning Rate of Polyurethane Sponge :*** NVSS 302 complies with international standards (SE) is "0".
-***Permanent Deformation of Polyurethane Sponge :*** According to ISO 1856, it was determined as 8 ± 2% under 50% pressure and at 70 C for 22 hours.

The Seat;

-The skeletal structure of the seat parts is made of 19x120 special profile pipe and 2.5 (+-10) mm DKP sheet metal, shaped millimetrically on special doors with CNC machines, and metal construction is provided.

-The back section is made of 19x120 profile pipe, shaped millimetrically in special molds on CNC machines, reinforced with 2.00 (+-10) mm sheet metal in the middle parts and welded with gas metal arc welding.

-Chair backs and seat are made with at least 50 dns polyurethane and +-10% molded rubber.

-The shafts that connect the seat part to the metal frame side carrier use PP copolymer plastic material to prevent future wear of the bearings.

-The base carriers of chaires are made of 40x60x1,5 mm profile pipe, the processed in eccentric presses and welded with gas arc welding.

- The leggs were welded with 2.20 (+-10) mm sheet thickness by plastering in hydraulic presses and drilling holes in eccentric presses.

- All metal parts of the chairs are painted with **electrostatic powder paint against corrosion and rust.**

The Specification Technical of the Fabric:

-%100 polyester
-***Weight :*** +-165 gr/m²
-***Width :*** 140 cm

Cleaning & Maintenance

-Can be erased with a damp cloth.
-***Washing Fastness (According to C06 A1S Method):*** Acetate 2, Cotton 3/4, Nylon 2/3, Poly 3, Acrylic 4, Wool 4.

Seat and Back Hardness Value

-According to ISO 2439 ILD 40%, it was determined as 260 ± 10%

Seat Color

-The side carriers, seat and back of the seat are covered with fabric.
-The fabric to be used in the upholstery process can be chosen in the desired color.